Autonomous Plant Protection Drone

User Manual

V1.0 / 2021.03

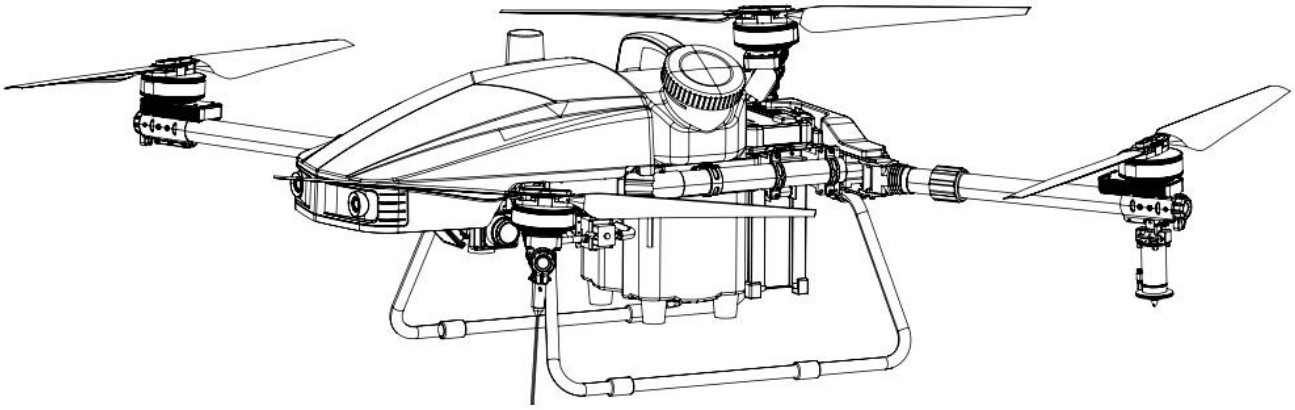

EA2021

Table of Contents

Product overview

The EA2021 series of low-altitude all-area detection plant protection drones are the multi-rotor plant protection drones launched by Suzhou EAVISION Robotics Technologies Co., Ltd. Build upon the company's industry-leading binocular vision technology, the drone can complete plant protection services for various terrains and crops. Listed below are the product functions:

- Autonomous obstacle avoidance means there is no need for users to map specific obstacles. The drone is capable of autonomous operation, with built in obstacle avoidance technologies.
- Intelligent capabilities, which can meet the plant protection needs of different crops in complex terrain environments such as plains, hills, mountains, and wetlands.
- Quick route planning. For areas with clear boundaries, users can manually determine plot boundaries without performing point-by-point surveying and mapping, which improves surveying and mapping efficiency.
- Precise positioning, support centimeter-level positioning, and the flight control system includes RTK components.
- Precise spraying technologies on the drone automatically adjust liquid flow according to the amount designated by the user to achieve intelligent spraying control.
- The all-terrain version can customize the nozzle. The operation requirements of field and economic crops are different, and the operator can choose centrifugal or mist nozzle according to the specific situation;
- The drones are convenient for transportation and feature a foldable design where the arms and propellers can be folded in reducing the space occupied by the drone and facilitating storage and transportation.
- Intelligent controls allow the drone to take off, hover, and return with a single press, no user intervention is required during flight with the drone operating at a high autonomous degree. New users can expect to understand flight controls in half an hour which greatly reduces the dependence of drones on professional pilots.
- Flight safety, after the differential signal is lost, the drone can maintain safe and autonomous flight for 1 minute, the crash rate is far lower than the industry average, and the safety is high;
- Data management, supporting a complete agricultural data management system to help improve the efficiency of operation management and improve economic value;
- The drone's complimentary smart battery supports 3C fast charging options with self-maintenance capabilities making charging and maintenance step efficient and quick.

Disclaimer

Thank you for choosing EAVISION EA2021 series of autonomous plant protection drones developed and manufactured by Suzhou EAVISION Robot Technologies Co., Ltd. (hereinafter referred to as "EAVISION Technologies").

All users should familiarize themselves with the operation and maintenance of EAVISION produced equipment. Please be sure to carefully read and abide by the relevant requirements of this manual, and at the same time operate in strict accordance with the operating requirements in the actual operation process and perform maintenance in accordance with the requirements in a timely and thorough manner.

Please read this statement carefully before using this product. Once the product is used, it is deemed to be an acknowledgement and acceptance of the entire contents of this statement. This product is not intended for use by persons under the age of 18. Before using this product, please accept the formal training of EAVISION Technologies and obtain the relevant qualifications and certificates. In the process of using the product, the user acknowledges to be responsible for their own behavior and all consequences arising therefrom.

EAVISION Technologies shall not be liable for all losses caused by the user's failure to use the product in accordance with this document, and shall not be liable for any indirect, consequential, punitive, incidental, special or penal damages. The user undertakes the use of this product only for legitimate purposes and agrees to abide by these terms and any relevant policies or guidelines formulated by EAVISION Technologies.

The performance of this product relies on the original parts manufactured and supplied by EAVISION Technologies. EAVISION Technologies does not assume any legal responsibility for any loss or injury caused by not using original parts and accessories.

This drone is a controlled aircraft. Please read the relevant regulations of the national drone management regulations and local airspace control regulations carefully before use. Once you use this product, it is deemed that you have read the relevant regulations and documents, and EAVISION Technologies is not responsible for any relevant legal responsibilities arising from the use of this product in violation of laws and regulations. According to relevant national laws and regulations, the owners of civil drones (maximum take-off weight ≥ 250g) need to log in to the "aircraft real-name registration system" for real-name registration, otherwise they will be punished by the regulatory authorities. Registration website: https://uas.caac.gov.cn

During use, please ensure that the power supply system and the arm deployment mechanism are in the correct position and keep the aircraft away from crowds and dangerous objects. It is strictly forbidden for pilots to operate the aircraft under the influence of alcohol, drugs, anesthetics and when feeling dizziness, fatigue and other debilitating physical or mental conditions. New pilots who have not completed sufficient flight training are not allowed to operate the aircraft alone outside the training grounds. Do not fly in severe weather conditions, such as rain and snow, sleet, and strong winds (gale winds of level 5 and above). When flying at speeds higher than 6 m/s, it is not recommended to use

the obstacle avoidance function, there is a risk of collision, and the user must bear the risk of collision and loss. Try not to fly in areas where magnetic field interference is likely, or in radio interference areas (such as high-voltage towers, large power equipment, radio and television transmission towers, mobile phone base stations, etc.). If operation of the drone is necessary, it is pertinent to ensure that no idle person is within 200 meters of the operating area. EAVISION Technologies is not responsible for any product damage, equipment damage and/or personal injury caused thereby. This statement has important implications for the safe use of this product and your legal rights. Suzhou EAVISION Robot Technologies Co., Ltd. reserves the right to update this disclaimer, thank you again for choosing EAVISION.

Note: The propellers on the drone rotate at extremely high speeds when the drone is in operation, which present as safety hazards. Do not get close to the propellers and motors during on-ground and in-flight operations. This product is not intended for use by any person under the age of 18.

Aircraft system composition

The EA2021 series of global perception plant protection drones are equipped with binocular vision sensors, as well as distance sensors and height sensors, which can observe obstacles ahead in real time, and select the optimal path to avoid obstacles through intelligent algorithms and real-time smart route planning to achieve accurate and efficient flight paths. This product uses GPS/RTK positioning technology to achieve centimeter-level high-precision maneuvers. The components of this aircraft system are listed as follows:

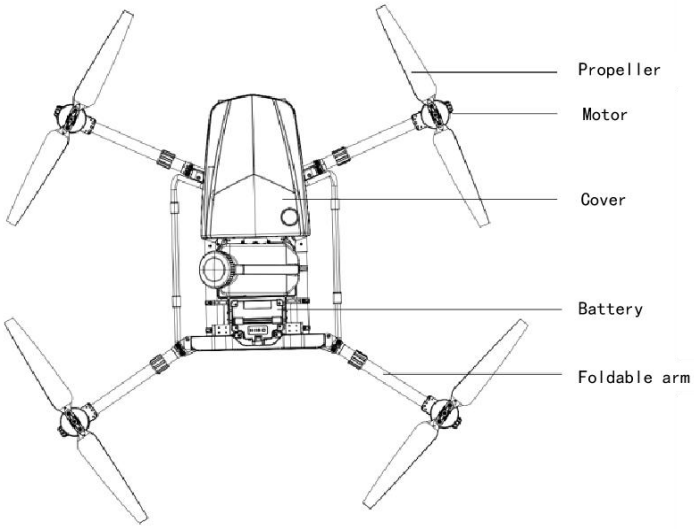

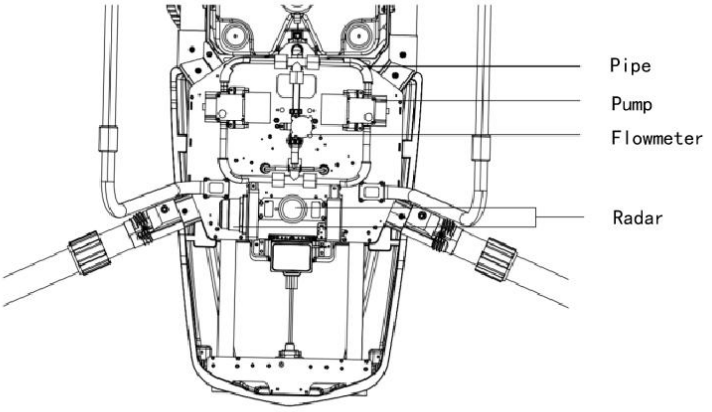

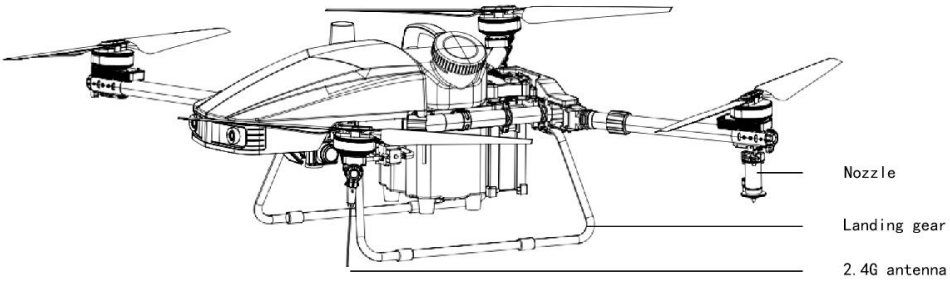

Technical parameters

Aircraft	Wheelbase	1070 mm @ Front and rear power axles
		1330 mm @ Left and right power axles
	Bare Frame Weight	24.55 kg (Standard Model) 25.25 kg (All-Terrain Model)
	Dimensions (without propellers)	1430*1170*510 mm
	Arm Lengths	506 mm
	Folded Aircraft Dimensions	960*620*510 mm
Spraying Nozzle	Liquid Container	15L/20 L
	Minimum Operation Height	0.7 m (Centrifugal)
		1.2 m (Mist)
	Number of Nozzles	2 Nozzles

	Liquid Atomization	10-100 μm
	Liquid Flow	400 ~3500 ml/min
	Fan	4~5 m
Battery	Suitable for this drone	EAVISION EA2020, EA2021
	Battery Type	Lithium Ion Battery 13S
	Voltage	48.75 V
	Energy Output	975 Wh
	Weight	Around 6.75 Kg
	Discharge Ambient Temperature Range	3℃~55℃
	Ambient Temperature Range for Charging	3℃~55℃
	Average Charge Duration	18 min
Charger	Charger model	JM-C1-5000W
	Compatible battery model	JM1-20000mAh-48.75V
	Input voltage/frequency	90-264 VAC/50-60 Hz
	Charging voltage	55.9 V
	Output Voltage	30~55.9 VDC
	Charger Weight	Around 12 Kg
	Working Temperature Range	-5℃~50℃
Charger Control	Outer Shell Dimensions	92.5*78.1*32.8 mm
	Extension Cable Length	60 cm
	Working Distance for Bluetooth Connections	<5 m
Generator	Dimensions	500*425*545 mm
	Weight	39.5 kg
	Charging Time	19-24 min
	Power Output	56.5 V 45 A
	Charging Power	5000 W

	Fuel Tank Capacity	15 L
	Engine Output	236 CC
	Maximum Engine Power	6000 W
	Engine Speed	3700 RPM
	Fuel Type	#92 Petrol
	Oil Type	SE15W-30W
	Fuel Consumption	≤0.50 L/KW
Remote control	Dimensions (Not including handles and antenna)	189*138*41mm
	Operation Frequency	5.8 G
	Transmission Distance	1.2KM
	Battery Capacity	10200 mAh
Surveying tool	Dimensions	171 * 63 * 55 mm (Not include extension rod)
	Battery Life	>8 h
	Waterproof Level	IP65
	Extension Rod Length	500 mm*4
	Signal	GPS/BeiDou/GLONASS

Remote control

Overview

EAVISION remote control adopts new advanced high-definition image transmission communication technology, with adaptive frequency band, which can automatically select the working frequency band with the lowest interference. The remote control is equipped with omnidirectional antennas as standard, and the image transmission and control distance can reach 1.2 to 1.8 kilometers. It carries Qualcomm Snapdragon 8-core CPU, which can decode 1080p @ 60fps video stream by hardware in both H.264 and H.265 format. The CPU’s powerful computational performance lowers image transmission and display latency to 180ms.

The remote control integrates a 5.5-inch 1920*1080 high-definition display with a maximum screen brightness of 1000cd/m2, nearly twice that of a common smartphone, and is clearly visible in direct sunlight.

Remote control parts

1. Antenna
Transmit aircraft control signals and image transmission signals

2. Centering Dial (customizable)

3. 3-Gear Switch
Manual/automatic control

4. Joystick
Control the flight direction of the aircraft

5. Status Indicator
Displays the system status of the remote control

6. Battery Level Indicator
Displays the current built-in battery level of the remote control

7. Centering Dial (customizable)

8. 3-Gear Switch
GPS mode/free mode

9. Joystick
Control the flight direction of the aircraft

10. Power
Turn on/off the remote control, display the battery level

11. Button (customizable)

12. 3-Gear Switch
Turn on/off forced spraying

13. Button (customizable)

14. Touchscreen
Built-in Android system, can directly run EAVISION APP

Remote control ports

Overview - Transmitter Top

Overview - Transmitter Bottom

1. Standard HDMI Port

External display, video output

2. 4P DATA Port

External RTK port

3. USB-A Port

External U drive

4. 1/4" Threaded Hole

Tripod position

5. TF Card Slot

External storage

6. SIM Card Slot

Access to mobile network

7. 4P DATA Port

External RTK port

8. Type-C Port

Charging port

Remote control operation

Power On/Off

1. When the remote control is off, short press the power button once, the battery indicator will light up, if the battery is low, please charge it.
2. When the remote control is turned off, short press the power button for about 1 second, the battery indicator lights up, then press and hold the power button for about 2 seconds. When the battery indicators light up in sequence, the remote control is turned on.
3. When the remote control is turned on, press and hold the power button for about 2 seconds, a pop-up window will appear on the screen. Touch the shutdown icon to turn off the remote control.

- Screenshot: When the remote control is turned on, press and hold the power button for about 2 seconds, a pop-up window will appear on the screen. Touch the screenshot icon to take a screenshot.

- Lock Screen: When the remote control is turned on, short press the power button, the remote control screen will turn off and enter the energy-saving mode.
- It takes about 1 minute and 30 seconds for the MK15 remote control to start up when the drone is powered on for the first time; During operation, it takes 30-35 seconds when the main battery is replaced (if the secondary battery is not powered off).

Charging

The remote control only supports charging with the original standard adapter when it is turned off.

1. Use the Type-C fast charging cable to connect the remote control and the adapter.
2. If the charging indicator light is red, it is charging.
3. If the charging indicator turns green, the charging is complete.

- The remote control cannot be charged with the 5V adapter, please use the original fast charging charger.

- The remote control cannot be charged when it is turned on. Please make sure that the remote control is turned off before charging.

Operating the aircraft

The joystick mode of the remote control can be changed in "System Settings" in "SIYI TX" APP. The joystick mode is divided into mode 1 (Japanese standard), mode 2 (American standard) and mode 3 (Chinese standard), as shown in the following figure:

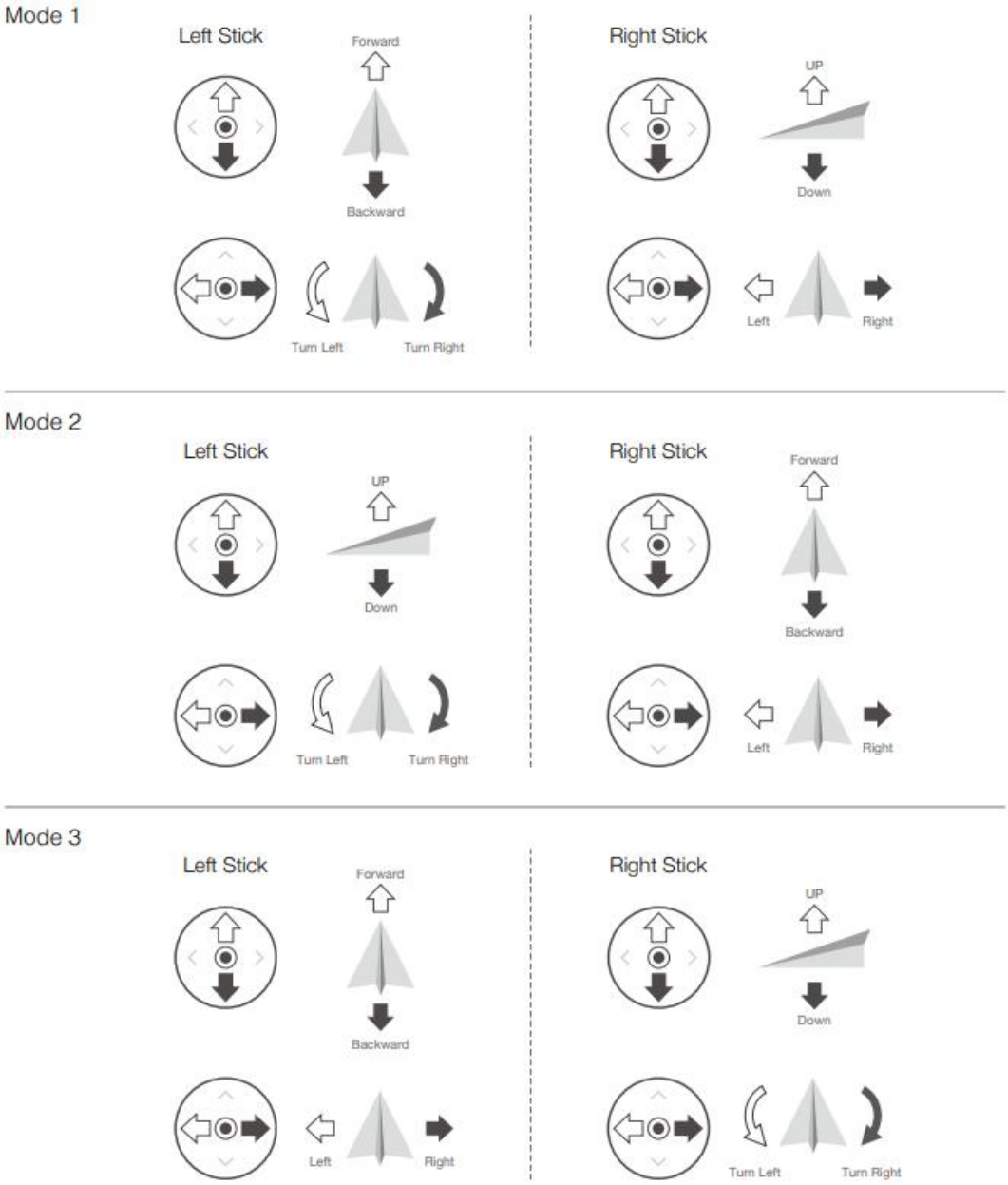

Linking

1. Enter "System Settings" in "SIYI TX" APP, find “Frequency” and click "Start".

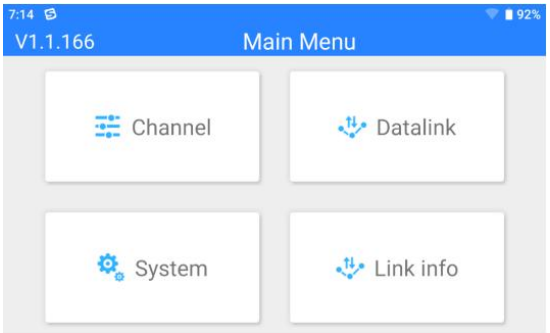

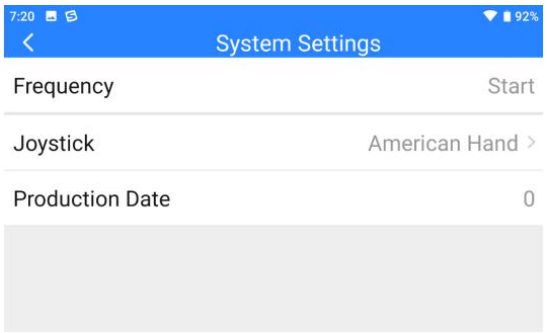

2. The status indicator of the remote control will flash red quickly, and it will display “Linking” on the screen.
3. Press and hold the link button of the receiver for 2 seconds, the receiver status indicator will flash red quickly.
4. Wait for 5~10 seconds. When the linking is successful, the status indicators of the remote control and the receiver will turn green.

Operation control

- Manual/Auto Mode Switch
  Move the 3-gear switch in the upper left corner of the remote control to the upper gear for automatic flight, and to the lower gear for manual flight.
- Forced Spraying
  The three-gear switch below the power switch of the remote control is a forced spraying switch. Turn it to the left gear to turn off spraying, and turn it to the right gear to turn on spraying.
- FPV
  Open "SIYI FPV" on the remote control to display the image transmission screen.

Remote control indicator

The status indicator of the remote control has different meanings by flashing three colors and different flashing frequencies.

Indicator	Remote Control Status
Red light flashes quickly	Linking
Red-green-yellow flash alternately slowly	Image transmission is starting
Red-green-red-green-red flash alternately	Unexpected shutdown of Android system
Red light flashes slowly	Firmware does not match
Red light flashes three times	Image transmission initialization failed
Red light flashes four times	The remote needs to be calibrated
Yellow light flashes slowly	The power supply voltage of the remote control is abnormal
Yellow light flashes twice	The remote control Bluetooth is not recognized
Red light keeps on	No communication with receiver
Yellow-red Yellow-red-red Yellow-red-red-red	Remote control temperature first level alarm Remote control temperature second level alarm Remote control temperature third level alarm
Green-red Green-red-red Green-red-red-red	Receiver temperature first level alarm Receiver temperature second level alarm Receiver temperature third level alarm
Green light keeps on, flashes	The faster the flashing speed, the worse the signal

Notice

1. Do not use the remote control to control the aircraft in crowded places, places with many obstacles, places with strong magnetic fields or signal interference sources, or other areas that are likely to cause unnecessary economic losses or even personal injury.
2. When operation, please do not cover the remote control antenna or block signal transmission.
3. The top of the remote control antenna has the weakest signal transmission. When operation, avoid pointing it to the aircraft.
4. When the aircraft motor is still running, please do not cut off the power of the remote control.
5. Before operation, please check the power of the remote control.

Checklist before use

1. Check whether the equipment is complete before operation

- EA2021 aircraft
- Remote control
- Battery
- Charging station
- Surveying tool
- Mobile base station

2. Check aircraft

- Check whether the aircraft arm sleeve is properly tightened and whether the screws are securely in place, especially the motor fixing screws and propeller fixing screws. If they are loose, please reinforce by screwing the loose screws back in.
- Check whether the aircraft landing gear. If it is bent or deformed, please replace it timely.
- Check the camera lens, height sensor, and distance sensors for dirt, dust, damage, etc. If there is a stain, you can use a clean towel, alcohol swab to wipe. If the lens or sensors are damaged, please replace it urgently.

3. Check the battery

- Check whether the battery power is sufficient before flight operations. We recommended the battery be fully charge before takeoff.
- Check whether the battery has been damaged by knocks, falls, bumps, or hard impacts. In case of deformations or abnormalities, we forbid use of the damaged battery.
- Check whether the battery interface is clean. If there are any foreign objects lodged in crevices, please wipe them off one by one with an alcohol cotton swab or other clean wipes. Keep the battery off for this step and avoid short circuiting the battery.

4. Check the surveying tool

- Check the battery percentage of the surveying tool. If the battery level is less than two bars, please charge it.
- Check whether the antenna of the surveying tool is loose. Tighten if needed.
- Keep the surface of the surveying tool antenna clean, otherwise it will affect signal strength.

5. Check the mobile base station (local mode)

- Check the power level of the mobile base station to ensure that the remaining power is greater than or equal to 3 bars.
- Check the mobile base antenna, GPS feeder, and GPS antenna of the mobile base station to ensure that they are intact and not damaged, and that the antenna screws are not loose.
- Check the tripod to make sure that the stand is firm and there are no loose screws.

Operating instructions

1. The Smart AG App

   Smart AG is an important software for controlling the aircraft. Its main functions include task sending, route planning, spraying parameter settings, operation mode settings, flight parameter settings, forwarding differential signals, and aircraft data interaction, etc. .

   1) Download the App

   The App works with Android systems.

   - Scan the QR code below to download the App.

   ⚠ Please check the version before using the App and update it if prompted.

2. The operation steps of Smart AG App are as follows:
   a) Open Smart AG and login with your personal account.
   b) Select the aircraft to be paired.
   c) Press "pair" to link the drone.
   d) When the drone is connected, select the base station mode

3. Connect the base station to either a mobile base station to perform operations.
   1) Mobile base station connection (global offline model)
      a. Select an open area, away from trees, obstacles, utility poles, high-voltage lines, crowds, etc., and keep the tripod held at a vertical level
      b. Make sure there are no obstacles near the inverted cone directly above the base station antenna
      c. Double check that the base of the tripod is secured into the ground and kept there by solid and stable soil.
      d. Affix the base station body on the tripod with screws
      e. Turn on the power button, wait for 5 minutes, the blue indicator should flash, and the base station should be fully functional.

   ⚠ **Note: The signal coverage of the base station is 10km. Do not move the base station in any way during flight operations.**

4. Map and survey

The surveying tool is used to survey the desired operating boundaries to provide the aircraft with more accurate boundary information, thus laying down a reliable ground map for any precision spraying operation. The steps are as follows:

- Go to an open area and ensure that the GPS antenna is not obstructed. The GPS indicator should always be on, and the device should search for satellite signals.
- Open the Surveying App and activate the Bluetooth on your phone to connect to the surveying tool. When the Bluetooth indicator flashes slowly, the system is ready.
- Begin surveying.

5. Magnetic Compass Calibration

The magnetic compass reads geomagnetic information and assists the GPS to locate the aircraft, which plays an important role in the flight accuracy and performance of the aircraft. However, the magnetic compass is susceptible to interference from other electrical equipment, resulting in magnetic interference. Interference will affect the drone' s precision instruments, flight accuracy and may even cause flight accidents. Magnetic compass calibration is a very important step, that if skipped will result in the system mot working properly.

1) Calibration Procedure

⚠ **Do note commence compass calibration in areas with heavy magnetic interference.**

Please select an open field or space for calibration.

⚠ **Do not carry magnetic objects such as keys, mobile phones, etc. when calibrating.**

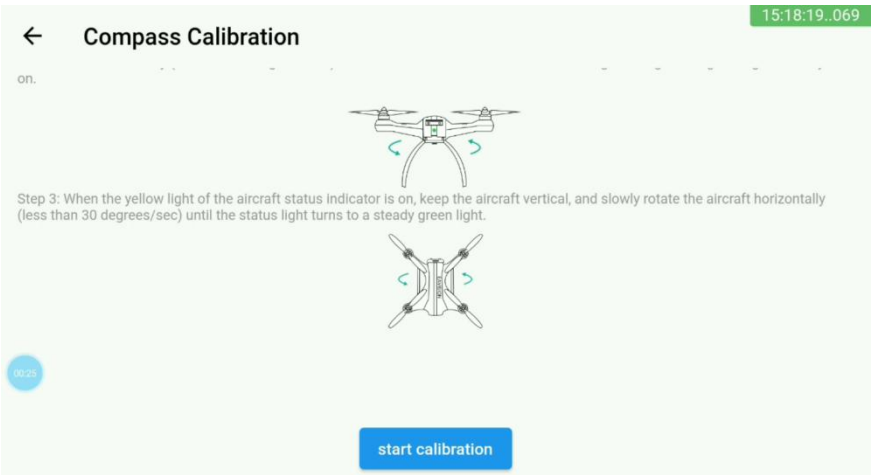

Power on the drone, open the EAVISION App, and after pairing the drone enter the details of the drone and click "Magnetic Compass Calibration". Follow through with compass calibration according to the App prompts.

6. Turn on the aircraft

- Unfold the four arms of the aircraft, confirm that the arms are properly fastened to the drone body and deploy the propellers.
- Put the filtered pesticides into the on-board liquid container and close the cover securely.
- Insert the main battery and switch on the battery to power up the drone.

- After the ESC emits three short, high pitched sounds, do a self-check and wait for the drone to broadcast a ready to operate notice.
- Plan routes, set parameters, and upload the information into the piloting program. Always ensure that there is no one within 10 meters when the drone takes off.

7. Land
   - After the task is complete, the drone App will make a request to land, confirm the request to initiate landing procedures. After a successful landing, the drone will deploy a "successful landing notice".
   - After the propellers have stopped, unplug the main battery.
   - Turn off the remote controller.
   - Put away the propellers and fold the arms securely.
   - The backup battery will automatically turn off in after 10 minutes.
8. Transport the aircraft
   - When transporting the aircraft to and from destinations, the arms and propellers should be stowed away securely.
   - The vision sensors and cameras onboard the aircraft should be kept away from hard surfaces and kept secured at all times.
   - Prevent the drone from shifting back and forth during bumpy and uneven journeys .
   - Note: We forbid lifting the protective front cover plate of the aircraft.
9. Pesticide Handling
   - The safety instructions provided by the pesticide manufacturer should be followed when handling pesticides.
   - In order to ensure operational safety and peak performances, users should stay up to date on maintenance requirements.

Maintenance instructions

1) Every 5-10 operations
   - Check whether the nozzle and/or pipes are blocked. Clean the filters if necessary.
   - Check whether the propeller screws are loose.
   - Check whether the drone arms are fully secured to the mainframe.
2) Every day
   - Clean the liquid container, nozzles, all the pipes, and wipe down the protective casing, arms and propellers.
   - Wipe down the camera lenses, distance sensor, height sensor.

3) Weekly
   - Tighten the propeller screws, camera mounts, and motor screws accordingly.
   - Check the carbon fibre casing of the drone and replace parts if any cracks are found.
4) Monthly
   - Check whether the height sensor and distance sensor are connected and securely mounted to the drone.
   - Check the entire drone for damage (look for wear and tear).
   - Check whether any part of the ESC is loose or corroded.

5) Recommended replacement time for specific parts

- Water pump: We recommend that the cumulative max of 200 ha is when inspection and replacement will become necessary.
- Centrifugal nozzles: We recommend that the cumulative max of 200 ha is when inspection and replacement will become necessary.
- Mist nozzles: We recommend that the cumulative max of 267 ha is when inspection and replacement will become necessary.

Battery maintenance and precautions

1) Maintenance:

- The battery has its own self-maintenance function.
- When the battery is fully charged and stored for more than 10 days, the battery will automatically enter idle storage mode.
- Don’t leave the battery idle for too long we recommend that batteries be charged every 3 months minimum. Slowly charge to revive the battery after long storage times.

2) Notes:

- Do not charge EAVISION smart batteries with unofficial chargers.
- Do not use or store batteries near open flames, heat sources, flammable material, explosives, or corrosive items.
- Before installing or removing the battery from the drone, make sure the drone is powered off.
- Make sure the battery itself is off before plugging it into the charger.
- Do not dent or hit the battery.
- Do not short-circuit the charging and discharging ports, and we strictly advise against using wires or any metal contraptions to short the positive and negative ports of the battery.
- Do not submerge in any liquid or let the battery get wet.
- Users are prohibited from disassembling or repairing the battery in any way.
- Keep the batteries away from low temperature or high temperatures for long periods of time.
- Be conscious of the environment, do not discard used batteries at will, please contact the manufacturer for professional disposal options.

List of dangers and hazards

Type	Number	Description	Recommended Response
Dangers	1	Rotating propeller hazard	Seek Medical Attention Immediately
	2	Accidental battery fires	Use sand or a fire extinguisher to douse out the fire
	3	Pesticide residue on skin	Seek medical attention and attempt to immediately wash off with water
	4	Drone escapes designated flight area	Try the hover and if unable to resort to crash landing
	5	Aircraft accident caused by improper pilot operation	Continue pilot training
	6	Aircraft crashes due to insufficient battery	Avoid long routes
Harmful	1	Destroyed crops and surrounding environments via pesticide spraying	Contact the relevant pesticide department for options
	2	Improper battery disposal	Dispose of batteries properly

Fault handling instructions

	Fault	Handling Instructions
1	**Navigation Failure**	1) Power on the drone again (make sure the entire system is powered off and then powered on again), if the problem is fixed, you may continue operations. 2) If the problem persists, the aircraft should be powered off (including backup batteries) and proceed to contacting customer services.
2	**Altitude Sensor Failure**	1) Power off and power on the aircraft again (confirm that the entire system is powered off and then powered on again), if the problem is fixed, you can continue normal operations. 2) If the problem persists, check whether the altitude sensor is blocked and whether the sensor is clean. Clean the sensor with a cloth and power on again. 3) If the problem is still present, please contact customer service and attach data on the failure.
3	**Distance Sensor Failure**	1) Clean the lens of the distance sensor with a clean damp cloth.
4	**Remote Control Failure**	1) Check whether the remote control is turned on and has sufficient battery. 2) Next check if the remote controller is paired properly with the drone. Switch off and then on again. 3) If the problem persists, please contact customer services.
5	**Takeoff Failure**	1) Check that there are no foreign objects obscuring the drones sensors. Remove or clean off foreign objects when pertinent. 2) If the problem persists, please contact customer services.
6	**Pump Failure**	1) Power off and on the aircraft. 2) Perform maintenance steps if failure persists
7	**Nozzle Failure**	1) Please turn on the self-cleaning function to clean the spray system and observe whether the left/right water pump can be turned on and off normally. 2) Check if the left/right centrifugal motor is filled with water, and if the rotor is blocked. If the pump is turned on normally, the motor is not blocked and the problem is solved, please continue operations;
8	**GPS Failure**	1) Restart the aircraft. 2) If the problem persists, please place the aircraft in an open field, away from the launch tower, high-voltage lines, military bases, and power off and on again. If the problem is fixed, you can continue regular use of the aircraft. 3) If the problem persists, please contact customer services.
9	**Weak GPS Signal**	1) Please confirm that the calibration environment of the aircraft is open and interference free. 2) Confirm that there are no towers, military bases, or high-voltage power lines nearby. 3) If the problem persists, contact customer support.
10	**Vision Sensor Abnormal**	1) Confirm that there is an official 48V power supply connected to the drone. 2) Check if the camera and sensor lights are on. 3) If the problem persists, contact customer services.
11	**Task Validation Failure**	1) Make sure the in-App parameters are set correctly. The aircraft should not be is too far from designated operating area, and that the maximum distance between the take-off point and the waypoint cannot exceed 1500 meters. 2) Check whether cellular signals are up and running. 3) Restart the App and send in the task again. 4) Power on and off the aircraft again. 5) If the problem persists, contact customer services.
12	**Failed Landing**	1) Switch to manual mode on the remote control and land the drone manually. 2) Please upload logs about the failure to customer services.
13	**Exceeding Maximum Altitude Settings**	1) Switch to manual mode or use fine-tuning to adjust the operating height. 2) When switching back to auto mode, it is necessary to check that the height displayed by the App is basically the same as the designated operating height

		before switching.
14	**Failure to Locate Safe Zones**	1) Check whether there are any obstacles between the take-off point and the operation area. If there are no obstacles, you may continue. 2) If there is an obstacle between the take-off point and the plotted area, we recommend relocating to a new zone.
15	**Manual Operation**	1) If you can see the aircraft and nearby obstacles clearly, you may attempt manual operation. 2) If you can't see the plane and obstacles, and don't know the environment well, click "Return". 3) If you can't return home, you need to make a forced landing. 4) Once landed, check whether all drone sensors are clean and initiate the background to process the plot, and upload the flight log.
16	**Forced Landings**	1) Make sure it is safe for the aircraft to land. 2) If there are obstacles or water below the drone, you can use the fine-tuning function to direct the aircraft to the nearest safe zone for forced landing. 3) Skilled pilots can switch to manual and fly to the nearest safe landing. Note that if it is a forced landing due to insufficient power, the aircraft must be forced to land as soon as possible, otherwise the aircraft cease to fly.
17	**Request for Exhausting**	1) Check pipes for leaks. 2) Check whether the water pump works. 3) If the problem persists, contact customer services.
18	**Battery Failure**	1) Try another fully charged battery (make sure the entire system is turned off when restart). Before inserting the battery, make sure that there is no grass, soil, pebbles, or liquid residue in the battery socket of the aircraft. Make sure the battery is well connected to the drone. 2) If the problem persists, contact customer support services.
19	**Other Warning Broadcasts**	1) Process according to the error notice and attempt to restart systems if necessary. 2) If the problem persists, contact customer services.

Warranty

The scope of the "Warranty" warranty for EAVISION aircraft products:

Products subject to free warranty service must meet the following requirements:

- Normal use within the specified product warranty period
- Quality reasons such as product performance failure
- The carrier code, factory label and other markings should be consistent with the information on the order confirmation with no signs of tears or alterations
- Provide legal and valid proof of purchase (contract or invoice) and a warranty card.

Damage or failure of the insured parts due to the following reasons is not covered by the complimentary warranty:

- Equipment failure or damage caused by the user or operator disassembling the flight controller, CPU, PDB, GPS module, camera/sensors, altitude sensor, distance sensor, airframe, ESC module, and motors
- Equipment failure or damage caused by abnormal factors such as water damage
- Damage caused by the user or operator not following the instructions or operating procedures designated by EAVISION.
- Failure or damage caused by careless use of this product by the user or operator beyond the scope of normal functions.
- If the user or operator makes any modifications or installations that fail to meet the requirements of official instructions and guidelines.
- Any self-made and foreign parts are not the responsibility of Party A
- Direct or indirect failure or loss caused by flight under poor flight conditions.
- Direct or indirect failures and losses caused by natural disasters, wars, terrorist attacks, riots, coups and other force majeure reasons
- All loss of rental equipment due to theft, robbery, etc.
- Other failures or damages not caused by the design, manufacture, quality, and other problems of the product itself.
- If the fuselage is damaged or lost in a manner not due to the quality of the product itself.
- In the event of failure of certain components not covered by the warranty, the user has the right to consult Party A on maintenance or replacement matters, and the maintenance and replacement costs shall be determined by both parties through negotiation.
- In the case of the company launching other preferential sales policies, it shall be implemented in accordance with specified provisions.

List of "Warranty" EAVISION Components

List #	Parts name	Warranty period
1	Flight control	12 Months
2	CPU	12 Months
3	Power distribution board	12 Months
4	GPS and signal communication equipment	12 Months
5	Cameras	12 Months
6	Distance sensors	12 Months
7	Spraying control module	12 Months
8	Base station equipment and charger	12 Months
9	Surveying tool and charger	12 Months
10	Airframe	12 Months
11	Tank	12 Months
12	Remote controller (including receiver)	12 Months
13	Charger	12 Months
14	Electronic Speed Controller (ESC)	12 Months
15	Motor	200 hours (cumulative working hours) or 6 months, whichever is reached first
16	Landing Gear	6 Months
17	Nozzle	333 ha
18	Pump	333 ha
19	Electrical wires, spray systems (excluding nozzles and pumps), hardware, propellers, plastic parts	No warranty coverage

"Warranty" Certificate (See Appendix I)

Nameplate

Refer to the nameplate for the factory number and model number

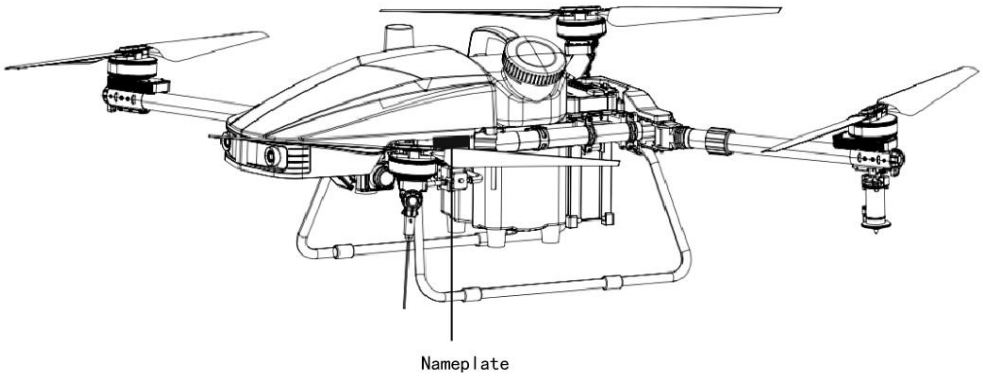

Appendix I

EAVISION Robotics Technologies

Warranty Certificate

(Customer)

Product Information	Product Name	Autonomous Plant Protection Drone			
	Model Specification				
	Manufactured In	Suzhou, China			
	Serial Number				
User Information	Name		Address		
	Phone Number		Email		
Sales Information	Sales Unit		Address		
	Contact Number		Email		
	Sales Date		Unit Price		
	Invoice Number		Sales Unit Stamp		
Manufacturer Information	Manufacturer Name		Address		
	Phone Number		Email		
Maintenance Records	Repair Date	Delivery Date	Failure Description	Repair Details	Repairer

Remarks:

1. This certificate must be stamped by the authorized sales unit of EAVISION Robotic Technologies Co., Ltd. to take effect.
2. For details, please refer to the Applicable detailed list of company guarantees.

Please Follow EAVISION Official Social Media Channel:

YouTube, Facebook, Twitter, LinkedIn, Instagram

The contents of this manual and product specifications are subject to change without prior notice.

Suzhou EAVISION Robotic Technologies Co.,Ltd.
Address: Unit1-A, No.3 Workshop, 28 Xiasheng Road, SIP, Suzhou, Jiangsu Province, China
Website: www.eav.top Contact Number: 4008002872